TRINITY GLASS INTERNATIONAL
33615 1st Way S, Federal Way, WA 98003

L F SCHMIDT LICENSE No. 43409 STATE OF FLORIDA PROFESSIONAL ENGINEER

Digitally signed by Lyndon F Schmidt
Date: 2023.08.01 11:22:37 -04'00'

This item has been digitally signed and sealed by **L. F. Schmidt, P.E.** on the date adjacent to the seal.

Printed copies of this document are not considered signed and sealed and the signature must be verified on any electronic copies.

THIS PRODUCT APPROVAL IS VALID ONLY FOR THE STATE OF FLORIDA

GLAZED FIBERGLASS DOUBLE DOOR
w/ SIDELITE(S)
"IMPACT"
INSWING / OUTSWING

GENERAL NOTES

1. This product has been evaluated and is in compliance with the 8th Edition (2023) Florida Building Code (FBC) structural requirements excluding the "High Velocity Hurricane Zone" (HVHZ).
2. Product anchors shall be as listed and spaced as shown on details. Anchor embedment to base material shall be beyond wall dressing or stucco.
3. When used in areas requiring wind borne debris protection, this product complies with FBC Sections 1609.1.2 & R301.2.1.2 and does not require an impact resistant covering. This product meets missile level "D" and excludes Wind Zone 4 as defined in ASTM E 1996 and FBC Sections 1609.1.2.2 & R301.2.1.2.1.
4. For 2x stud framing construction, anchoring of these units shall be the same as that shown for 2x buck masonry construction.
5. Site conditions that deviate from the details of this drawing require further engineering analysis by a licensed engineer or registered architect.

TABLE OF CONTENTS

SHEET#	DESCRIPTION
1	Typical elevations, design pressures & general notes
2	Door panel details
3	Sidelite panel details
4	Elevations
5	Horizontal and vertical cross sections (2x buck)
6	Horizontal and vertical cross sections (1x buck)
7	Horizontal and vertical cross sections (Direct to Masonry)
8	Horizontal cross sections
9	Vertical cross sections
10	Buck anchoring
11	Frame anchoring
12	Components
13	Bill of materials

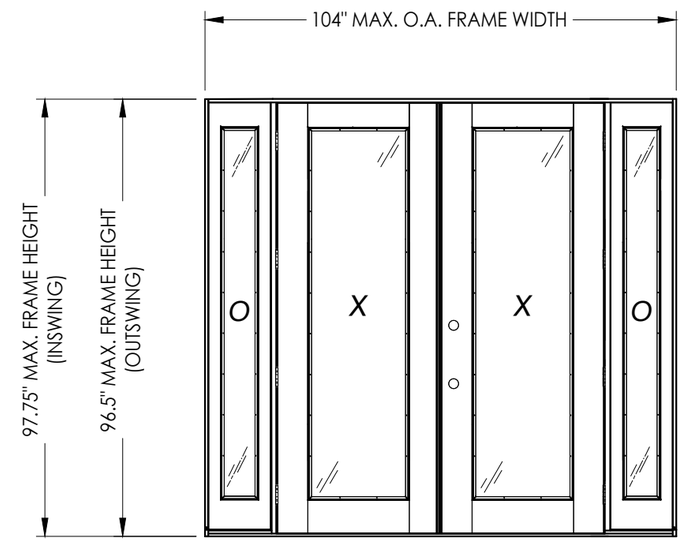

Continuous Head and Sill

CONFIGURATION	DESIGN PRESSURE (PSF) INSWING		DESIGN PRESSURE (PSF) OUTSWING	
	POSITIVE	NEGATIVE	POSITIVE	NEGATIVE
OXXO	+40.0	-45.0	+45.0	-45.0

Documents Prepared By:
Lyndon F. Schmidt
P.E. No. 43409
RW BUILDING CONSULTANTS, INC.
P.O. Box 230, Valrico, FL 33595
Phone No.: 813.659.9197
FBPE Registry No. 9813

PRODUCT: TRINITY GLASS INT'L

PART OR ASSEMBLY: TYPICAL ELEVATION, DESIGN PRESSURES & GENERAL NOTES

REVISIONS

NO.	DATE		BY
1	8/01/23	UPDATE TO 8TH ED. (2023) FBC	LFS

DATE: 4/15/21
SCALE: N.T.S.
DWG. BY: RW
CHK. BY: LFS
DRAWING NO.: FL-25575.18
SHEET 1 OF 13

Z:\2023 FBC Drawings\Trinity Glass Int'l\FL-25575 R5\FL-25575.17-18.dwg

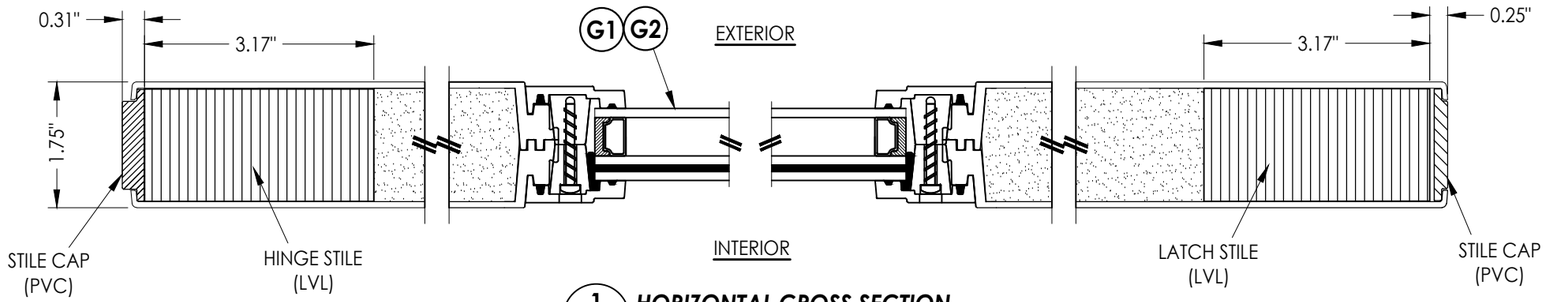

1/2 **HORIZONTAL CROSS SECTION**

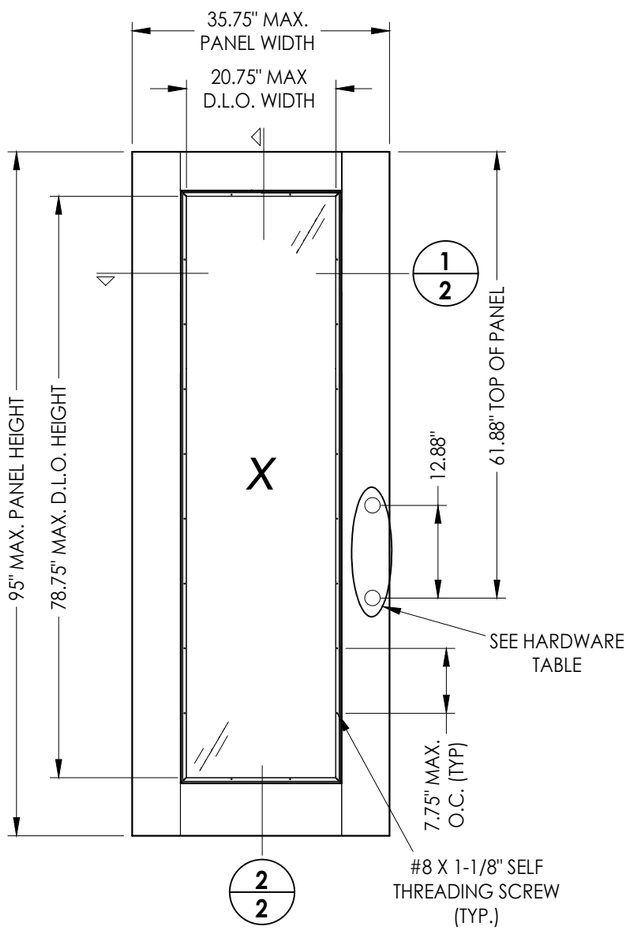

40 **GLAZED DOOR PANEL**
Fiberglass

DOOR SKIN: 0.075" MIN. THK. FIBERGLASS
CORE MATERIAL: POLYURETHANE FOAM

HARDWARE CHART		
MANUFACTURER	MODEL	
KWIKSET	KNOB:	SIGNATURE SERIES
	DEADBOLT:	SIGNATURE SERIES (980)
SCHLAGE	KNOB:	F SERIES
	DEADBOLT:	B60 SERIES

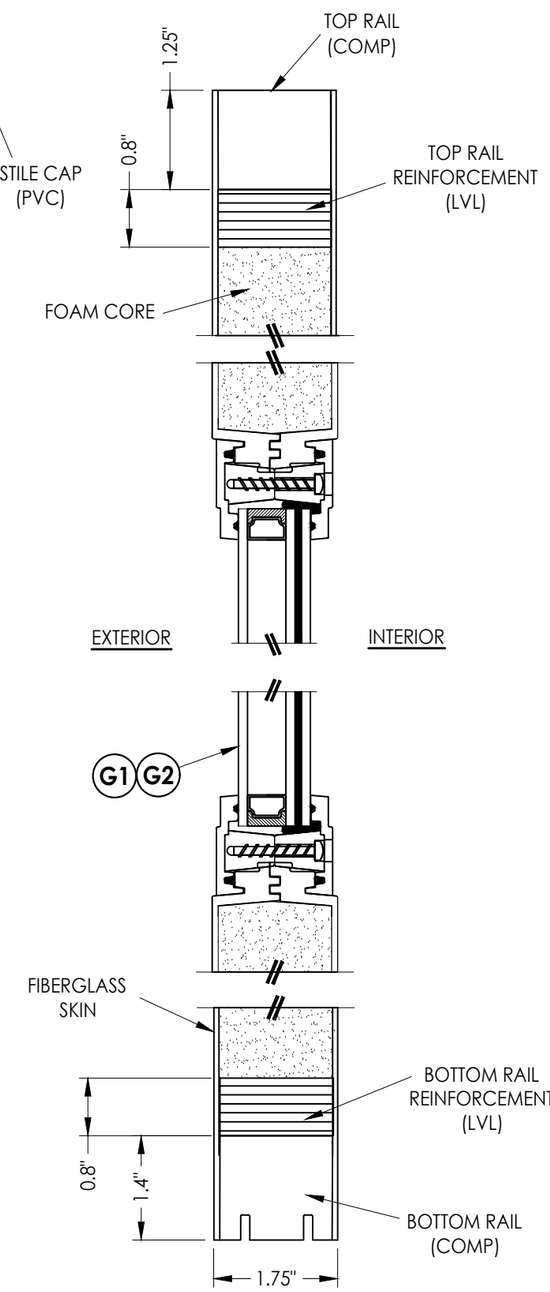

2/2 **VERTICAL CROSS SECTION**

Documents Prepared By:
Lyndon F. Schmidt
P.E. No. 43409
RW BUILDING CONSULTANTS, INC.
P.O. Box 230, Valrico, FL 33595
Phone No.: 813.659.9197
FBPE Registry No. 9813

PRODUCT: TRINITY GLASS INT'L

PART OR ASSEMBLY: DOOR PANEL DETAILS

REVISIONS

NO.	DATE		BY
1	8/01/23	UPDATE TO 8TH ED. (2023) FBC	LFS

DATE: 4/15/21
SCALE: N.T.S.
DWG. BY: RW
CHK. BY: LFS
DRAWING NO.: FL-25575.18
SHEET 2 OF 13

© 2021 R.W. BUILDING CONSULTANTS INC.

Z:\2023 FBC Drawings\Trinity Glass Int'l\FL-25575 R5\FL-25575.17-18.dwg

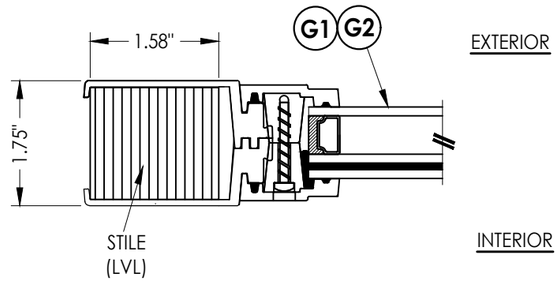

1/3 **HORIZONTAL CROSS SECTION**

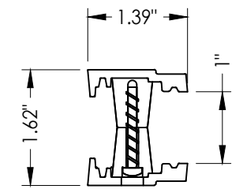

A1 **LITE FRAME**

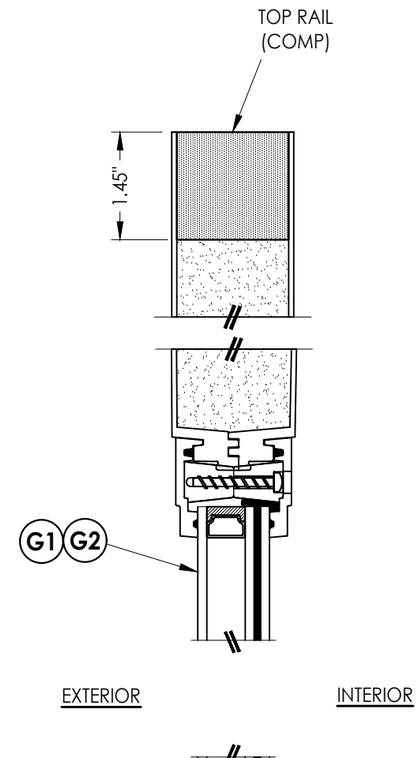

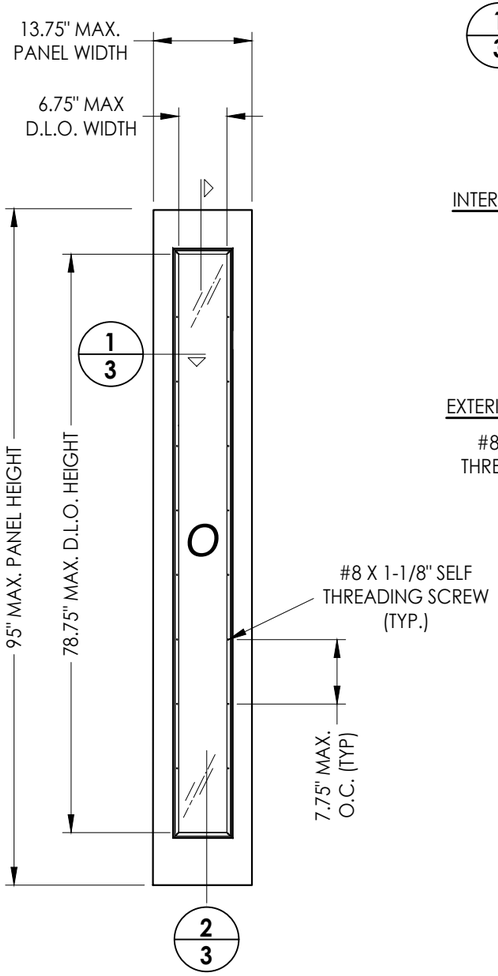

50 **SIDELITE PANEL**
Fiberglass

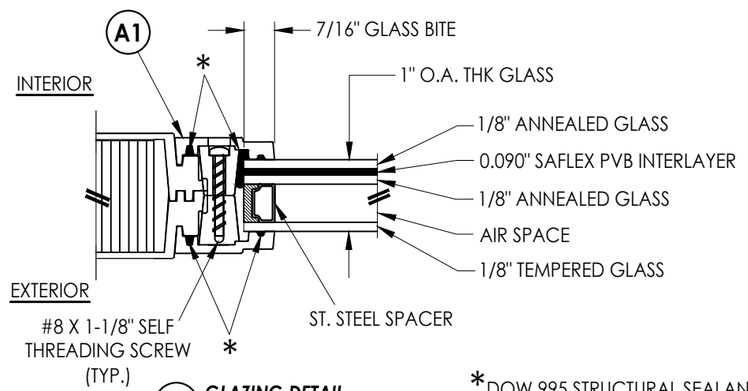

G1 **GLAZING DETAIL**
DUAL GLAZED

*DOW 995 STRUCTURAL SEALANT

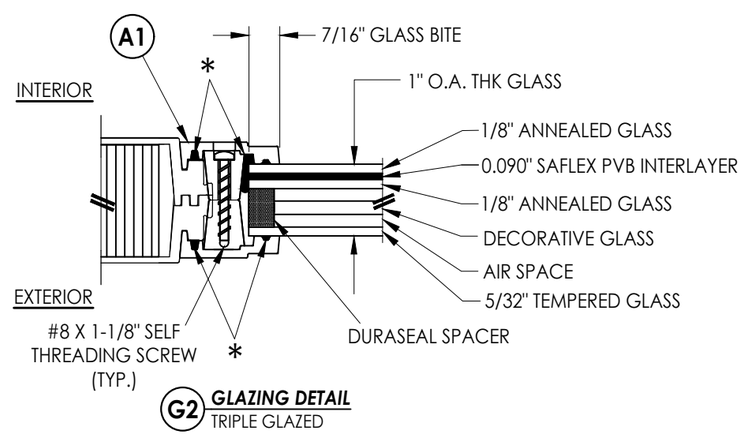

G2 **GLAZING DETAIL**
TRIPLE GLAZED

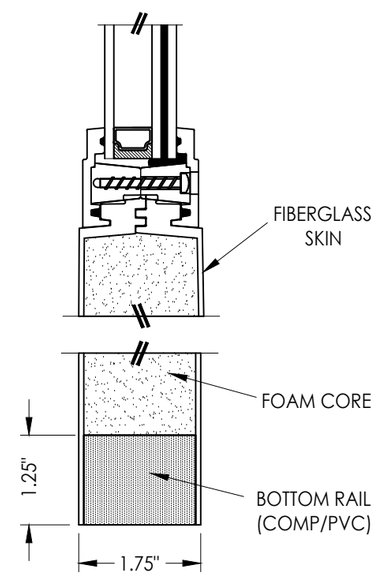

2/3 **VERTICAL CROSS SECTION**

DOOR SKIN: 0.075" MIN. THK. FIBERGLASS
CORE MATERIAL: POLYURETHANE FOAM

Documents Prepared By:
Lyndon F. Schmidt
P.E. No. 43409
RW BUILDING CONSULTANTS, INC.
P.O. Box 230, Valrico, FL 33595
Phone No.: 813.659.9197
FBPE Registry No. 9813

PRODUCT: TRINITY GLASS INT'L

PART OR ASSEMBLY: SIDELITE PANEL DETAILS

NO.	DATE	REVISIONS	BY
1	8/01/23	UPDATE TO 8TH ED. (2023) FBC	LFS

DATE: 4/15/21
SCALE: N.T.S.
DWG. BY: RW
CHK. BY: LFS
DRAWING NO.: FL-25575.18
SHEET 3 OF 13

© 2021 R.W. BUILDING CONSULTANTS INC.

Z:\2023 FBC Drawings\Trinity Glass Int'l\FL-25575 R5\FL-25575.17-18.dwg

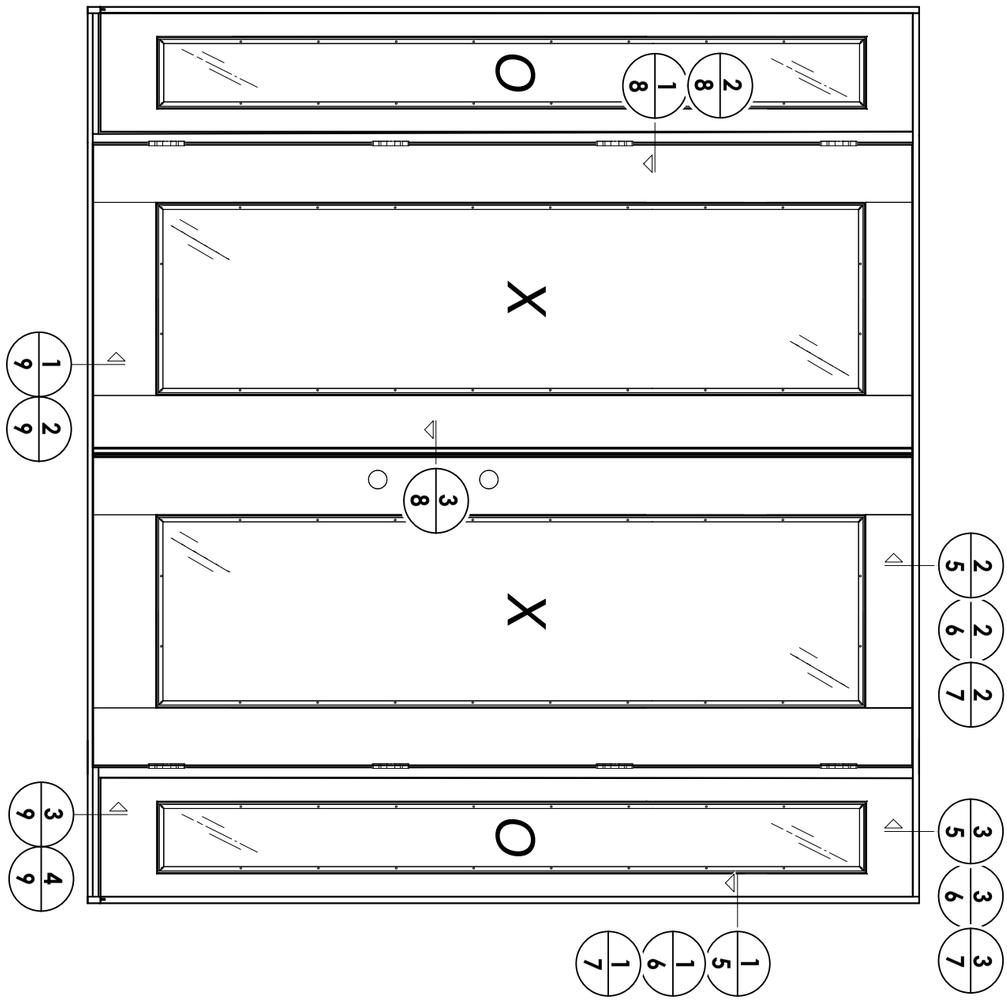

1	8/01/23	UPDATE TO 8TH ED. (2023) FBC	LFS
NO.	DATE	REVISIONS	BY

PRODUCT:
TRINITY GLASS INT'L

PART OR ASSEMBLY:
ELEVATIONS

Documents Prepared By:
Lyndon F. Schmidt
P.E. No. 43409

RW BUILDING CONSULTANTS, INC.
P.O. Box 230, Valrico, FL 33595
Phone No.: 813.659.9197
FBPE Registry No. 9813

DATE: 4/15/21
SCALE: N.T.S.
DWG. BY: RW
CHK. BY: LFS
DRAWING NO.: FL-25575.18
SHEET 4 OF 13

© 2021 R.W. Building Consultants Inc.

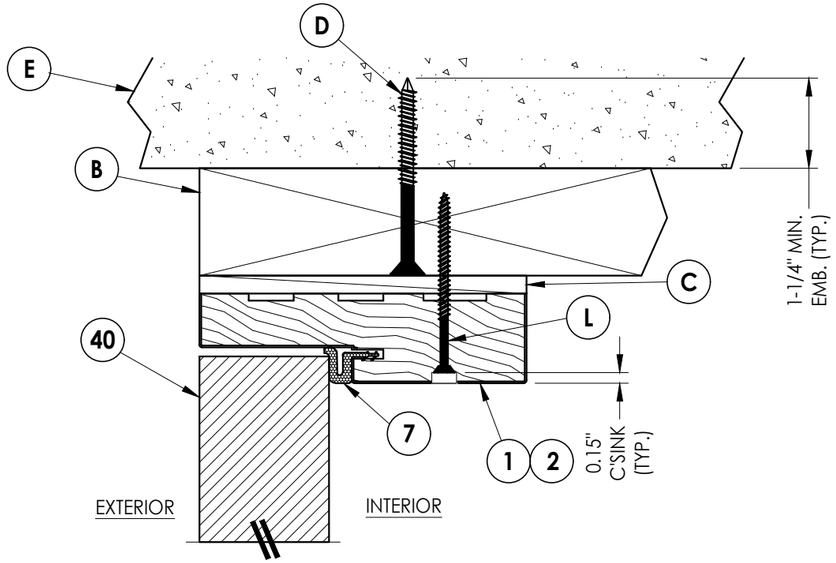

2/5 VERTICAL CROSS SECTION
Outswing shown - Inswing also approved

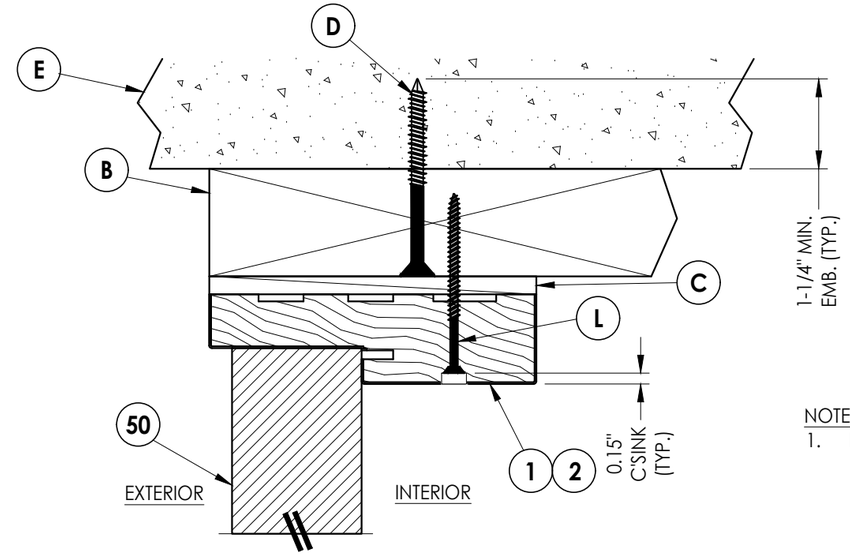

3/5 VERTICAL CROSS SECTION
Outswing shown - Inswing also approved

NOTE:
1. Item #26 located 6" from each end plus 5 more equally spaced (7 total).

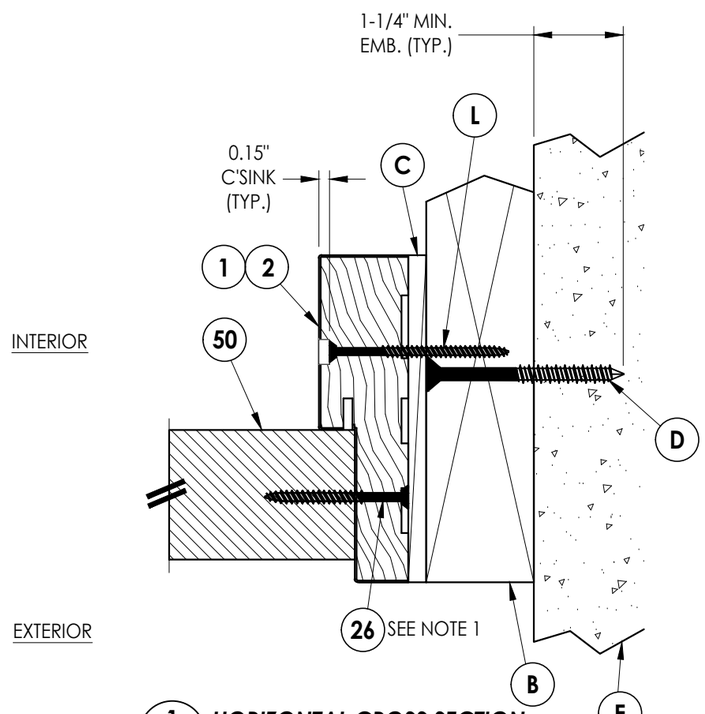

1/5 HORIZONTAL CROSS SECTION
Outswing shown - Inswing also approved

Documents Prepared By:
Lyndon F. Schmidt
P.E. No. 43409

RW BUILDING CONSULTANTS, INC.
P.O. Box 230, Valrico, FL 33595
Phone No.: 813.659.9197
FBPE Registry No. 9813

PRODUCT: TRINITY GLASS INT'L

PART OR ASSEMBLY: HORIZONTAL AND VERTICAL CROSS SECTIONS (2X BUCK)

REVISIONS

NO.	DATE		BY
1	8/01/23	UPDATE TO 8TH ED. (2023) FBC	LFS

DATE: 4/15/21
SCALE: N.T.S.
DWG. BY: RW
CHK. BY: LFS
DRAWING NO.: FL-25575.18
SHEET 5 OF 13

© 2021 R.W. Building Consultants Inc.

Z:\2023 FBC Drawings\Trinity Glass Int'l\FL-25575 R5\FL-25575.17-18.dwg

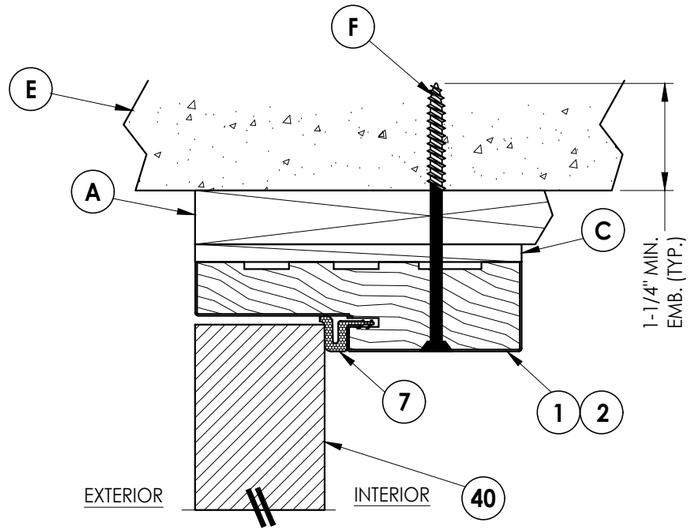

2/6 VERTICAL CROSS SECTION
Outswing shown - Inswing also approved

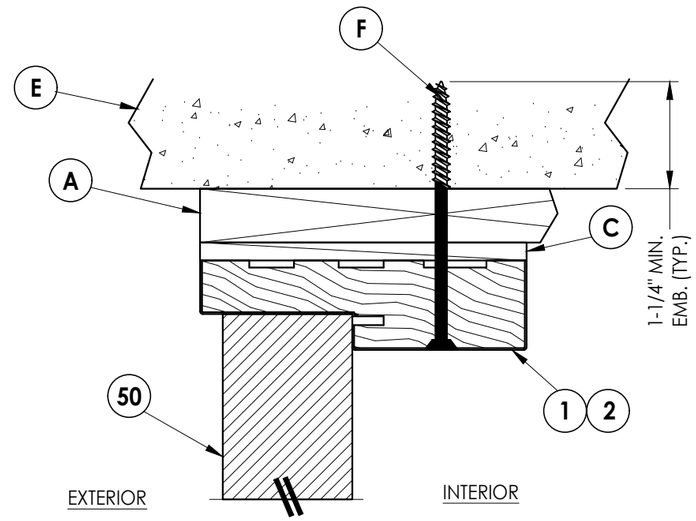

3/6 VERTICAL CROSS SECTION
Outswing shown - Inswing also approved

NOTE:
1. Item #26 located 6" from each end plus 5 more equally spaced (7 total).

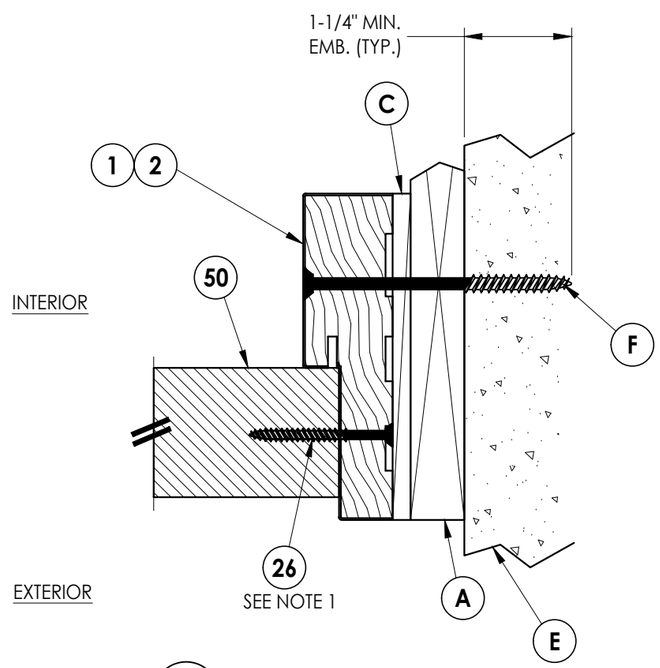

1/6 HORIZONTAL CROSS SECTION
Outswing shown - Inswing also approved

Documents Prepared By:
Lyndon F. Schmidt
P.E. No. 43409

RW BUILDING CONSULTANTS, INC.
P.O. Box 230, Valrico, FL 33595
Phone No.: 813.659.9197
FBPE Registry No. 9813

PRODUCT: TRINITY GLASS INT'L

PART OR ASSEMBLY: HORIZONTAL AND VERTICAL CROSS SECTIONS (1X BUCK)

NO.	DATE	REVISIONS	BY
1	8/01/23	UPDATE TO 8TH ED. (2023) FBC	LFS

DATE: 4/15/21
SCALE: N.T.S.
DWG. BY: RW
CHK. BY: LFS
DRAWING NO.: FL-25575.18
SHEET 6 OF 13

© 2021 R.W. BUILDING CONSULTANTS INC.

Z:\2023 FBC Drawings\Trinity Glass Int'l\FL-25575 R5\FL-25575.17-18.dwg

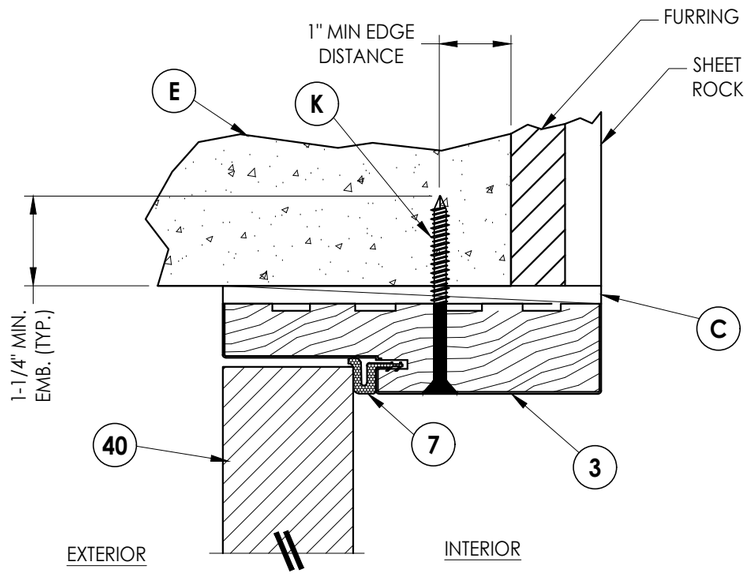

2/7 VERTICAL CROSS SECTION
Outswing only

NOTE:
1. Item #26 located 6" from each end plus 5 more equally spaced (7 total).

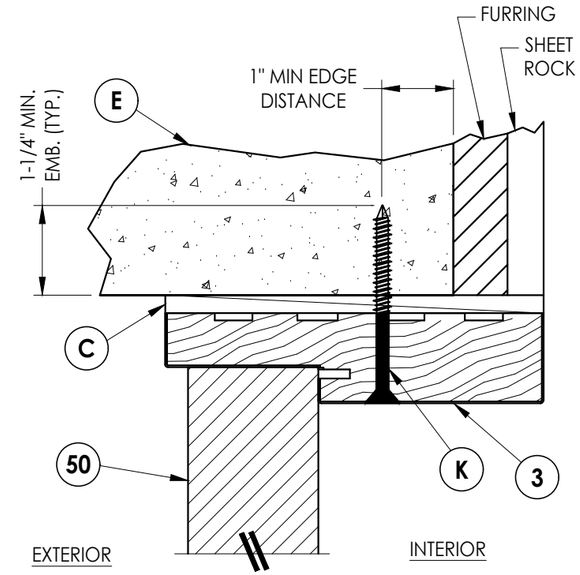

3/7 VERTICAL CROSS SECTION
Outswing only

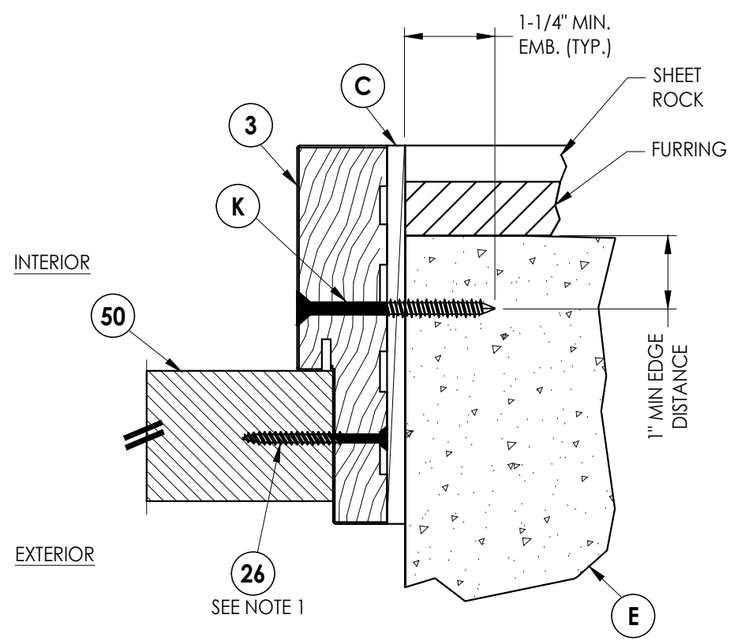

1/7 HORIZONTAL CROSS SECTION
Outswing only

Documents Prepared By:
Lyndon F. Schmidt
P.E. No. 43409

RW BUILDING CONSULTANTS, INC.
P.O. Box 230, Valrico, FL 33595
Phone No.: 813.659.9197
FBPE Registry No. 9813

PRODUCT: TRINITY GLASS INT'L

PART OR ASSEMBLY: HORIZONTAL AND VERTICAL CROSS SECTIONS (DIRECT TO MASONRY)

REVISIONS

NO.	DATE		BY
1	8/01/23	UPDATE TO 8TH ED. (2023) FBC	LFS

DATE: 4/15/21
SCALE: N.T.S.
DWG. BY: RW
CHK. BY: LFS
DRAWING NO.: FL-25575.18
SHEET 7 OF 13

© 2021 R.W. BUILDING CONSULTANTS INC.

Z:\2023 FBC Drawings\Trinity Glass Int'l\FL-25575 R5\FL-25575.17-18.dwg

NOTE:
1. Item #26 located 6" from each end plus 5 more equally spaced (7 total).

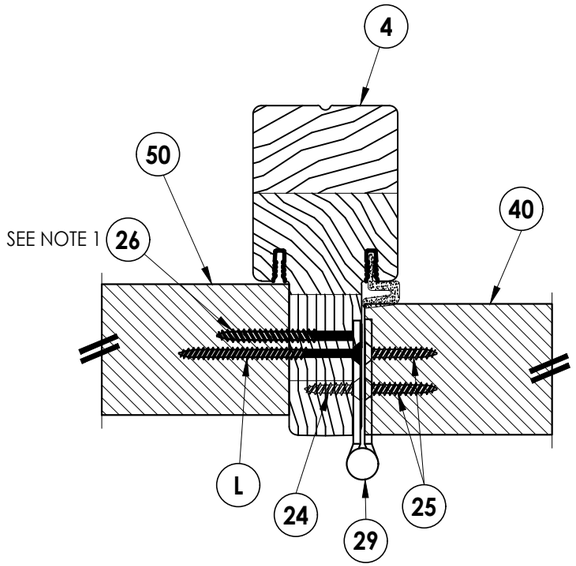

INTERIOR

EXTERIOR

1/8 HORIZONTAL CROSS SECTION
Outswing shown - Inswing also approved

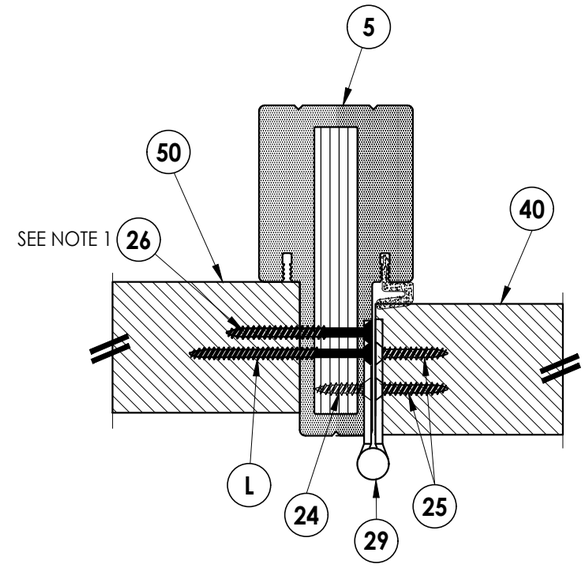

2/8 HORIZONTAL CROSS SECTION
Outswing shown - Inswing also approved

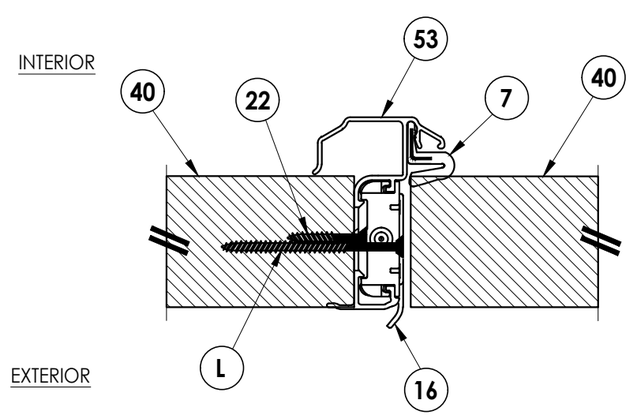

3/8 HORIZONTAL CROSS SECTION
Outswing shown - Inswing also approved

Documents Prepared By:
Lyndon F. Schmidt
P.E. No. 43409

RW BUILDING CONSULTANTS, INC.
P.O. Box 230, Valrico, FL 33595
Phone No.: 813.659.9197
FBPE Registry No. 9813

PRODUCT: TRINITY GLASS INT'L

PART OR ASSEMBLY: HORIZONTAL CROSS SECTIONS

NO.	DATE	REVISIONS	BY
1	8/01/23	UPDATE TO 8TH ED. (2023) FBC	LFS

DATE: 4/15/21
SCALE: N.T.S.
DWG. BY: RW
CHK. BY: LFS
DRAWING NO.: FL-25575.18
SHEET 8 OF 13

© 2021 R.W. BUILDING CONSULTANTS INC.

Z:\2023 FBC Drawings\Trinity Glass Int'l\FL-25575 R5\FL-25575.17-18.dwg

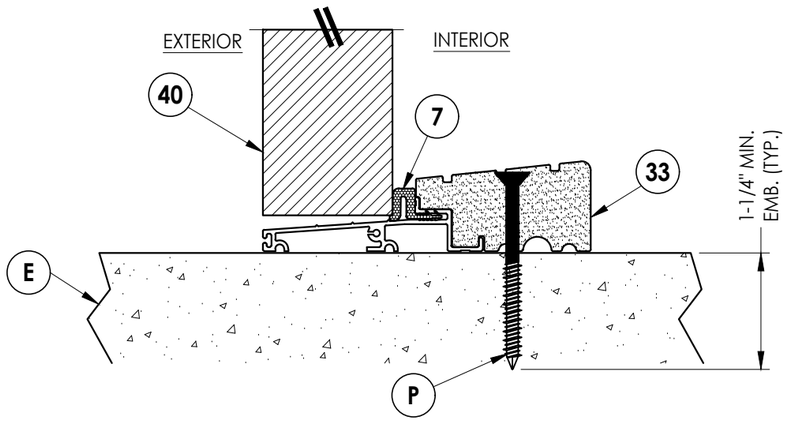

1/9 VERTICAL CROSS SECTION
Outswing sill - high dam

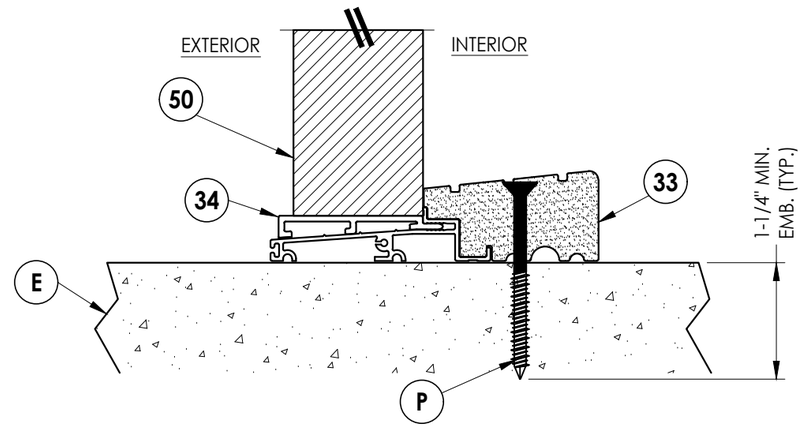

3/9 VERTICAL CROSS SECTION
Outswing sill - high dam

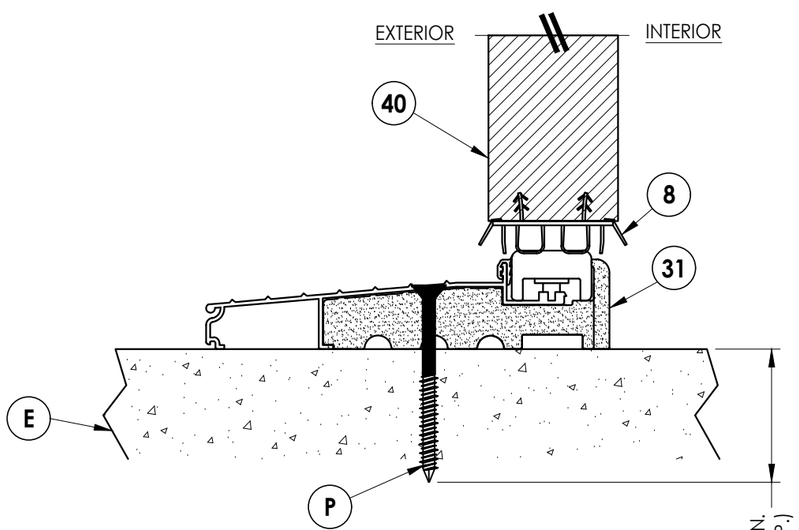

2/9 VERTICAL CROSS SECTION
Inswing sill

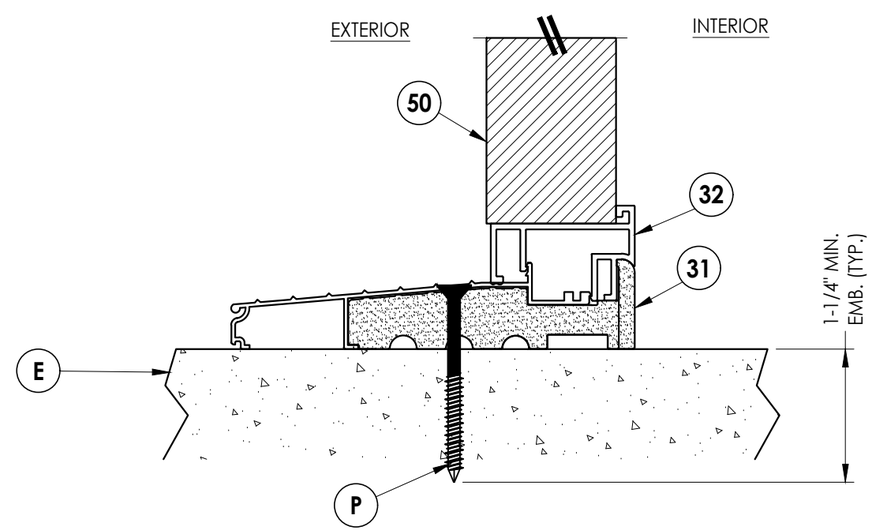

4/9 VERTICAL CROSS SECTION
Inswing sill

Documents Prepared By:
Lyndon F. Schmidt
P.E. No. 43409
RW BUILDING CONSULTANTS, INC.
P.O. Box 230, Valrico, FL 33595
Phone No.: 813.659.9197
FBPE Registry No. 9813

PRODUCT: TRINITY GLASS INT'L

PART OR ASSEMBLY: VERTICAL CROSS SECTIONS

REVISIONS

NO.	DATE		BY
1	8/01/23	UPDATE TO 8TH ED. (2023) FBC	LFS

DATE: 4/15/21
SCALE: N.T.S.
DWG. BY: RW
CHK. BY: LFS
DRAWING NO.: FL-25575.18
SHEET 9 OF 13

© 2021 R.W. BUILDING CONSULTANTS INC.

Z:\2023 FBC Drawings\Trinity Glass Int'l\FL-25575 R5\FL-25575.17-18.dwg

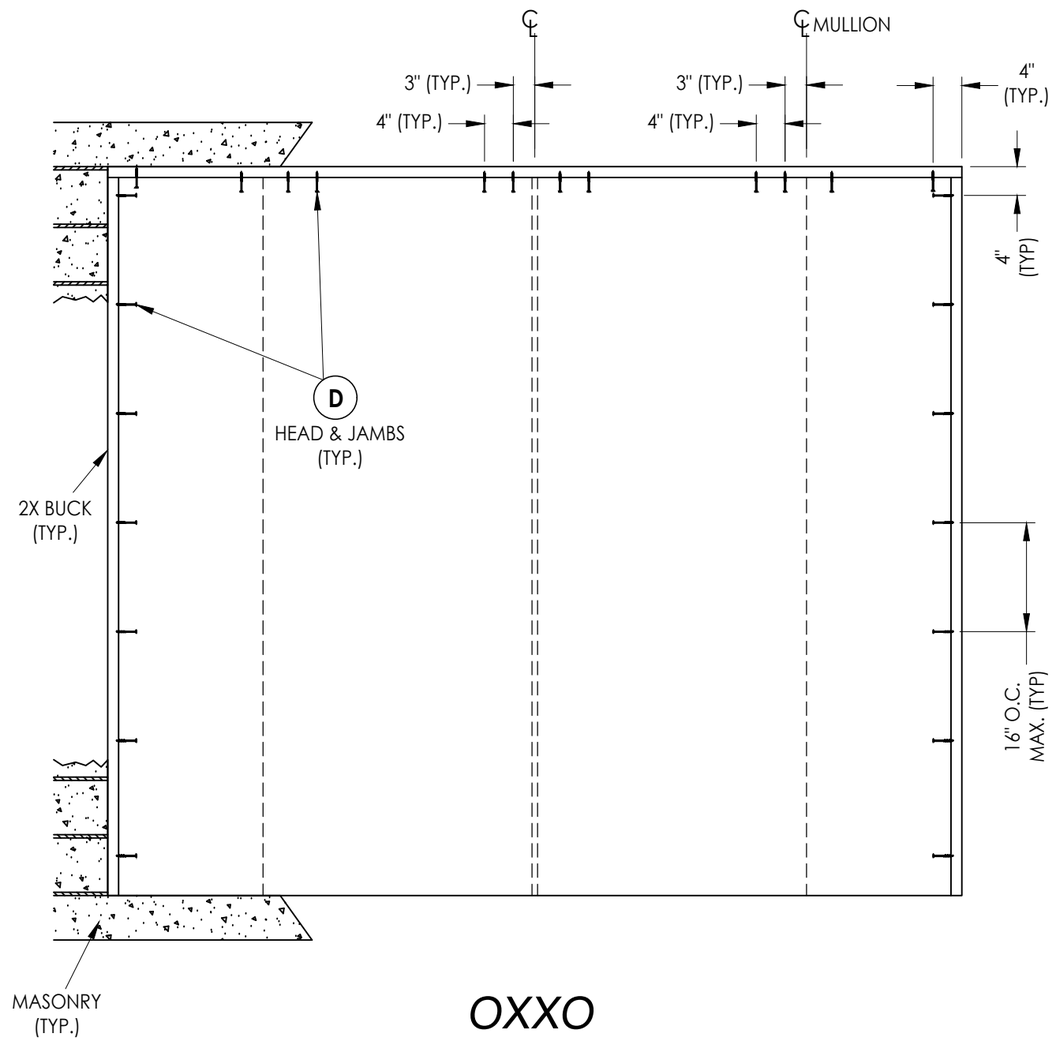

OXXO

2X BUCK ANCHORING

Documents Prepared By:
Lyndon F. Schmidt
P.E. No. 43409

RW BUILDING CONSULTANTS, INC.
P.O. Box 230, Valrico, FL 33595
Phone No.: 813.659.9197
FBPE Registry No. 9813

PRODUCT: TRINITY GLASS INT'L

PART OR ASSEMBLY: BUCK ANCHORING

REVISIONS

NO.	DATE		BY
1	8/01/23	UPDATE TO 8TH ED. (2023) FBC	LFS

DATE: 4/15/21
SCALE: N.T.S.
DWG. BY: RW
CHK. BY: LFS
DRAWING NO.: FL-25575.18
SHEET 10 OF 13

© 2021 R.W. Building Consultants Inc.

Z:\2023 FBC Drawings\Trinity Glass Int'l\FL-25575 R5\FL-25575.17-18.dwg

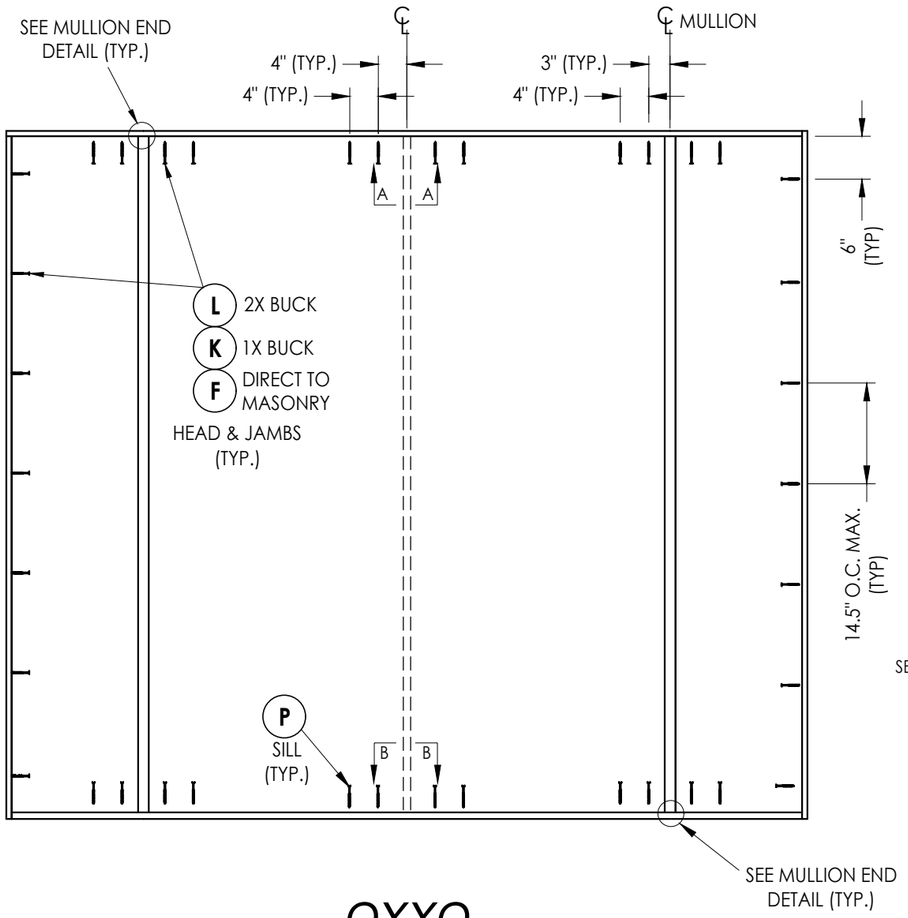

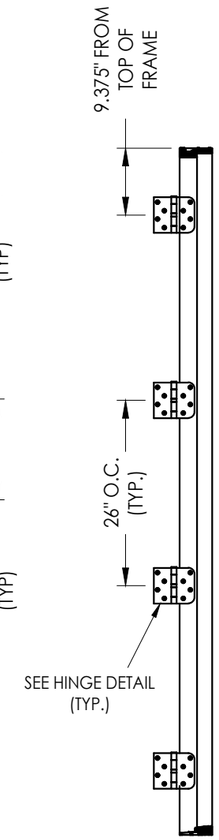

HINGE JAMB

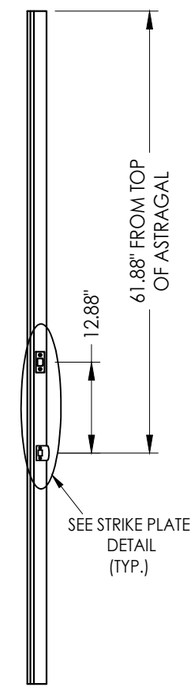

ASTRAGAL

OXXO

FRAME ANCHORING

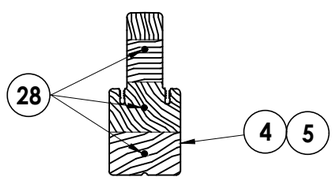

MULLION END DETAIL
(TYP. @ HEAD & SILL)

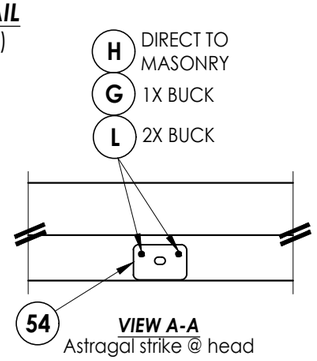

VIEW A-A
Astragal strike @ head

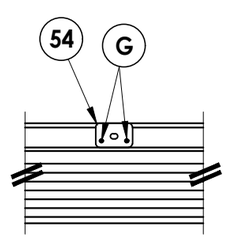

VIEW B-B
Astragal strike @ sill
Inswing

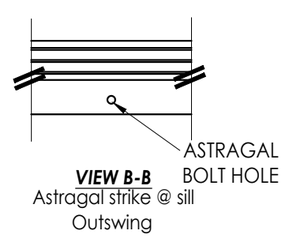

VIEW B-B
Astragal strike @ sill
Outswing

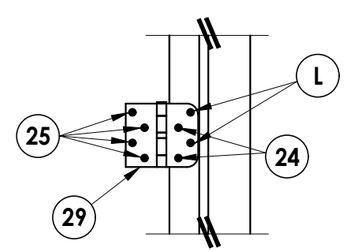

HINGE DETAIL
INSWING

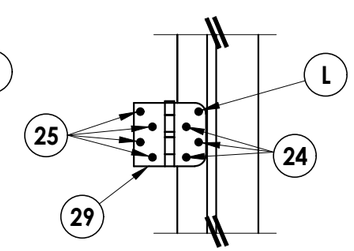

HINGE DETAIL
OUTSWING

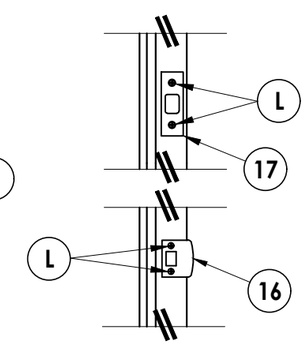

STRIKE PLATE DETAIL

Documents Prepared By:
Lyndon F. Schmidt
P.E. No. 43409

RW BUILDING CONSULTANTS, INC.
P.O. Box 230, Valrico, FL 33595
Phone No.: 813.659.9197
FBPE Registry No. 9813

PRODUCT: TRINITY GLASS INT'L

PART OR ASSEMBLY: FRAME ANCHORING

REVISIONS

NO.	DATE		BY
1	8/01/23	UPDATE TO 8TH ED. (2023) FBC	LFS

DATE: 4/15/21
SCALE: N.T.S.
DWG. BY: RW
CHK. BY: LFS
DRAWING NO.: FL-25575.18
SHEET 11 OF 13

© 2021 R.W. BUILDING CONSULTANTS INC.

Z:\2023 FBC Drawings\Trinity Glass Int'l\FL-25575 R5\FL-25575.17-18.dwg

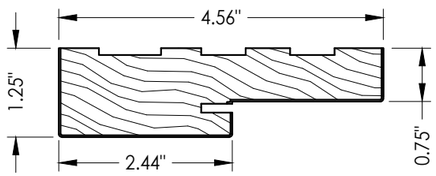

1 **FINGER JOINT PINE JAMB**

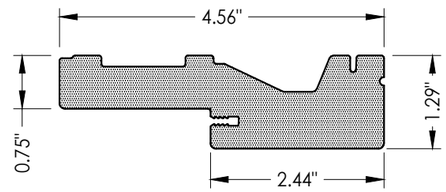

2 **HEAD AND JAMBS**
PVC

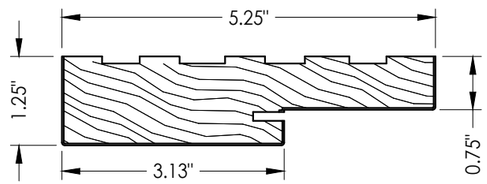

3 **FINGER JOINT PINE JAMB**

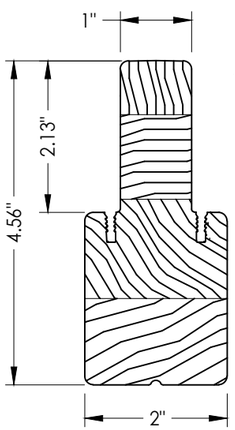

4 **INTEGRAL MULLION**
PINE

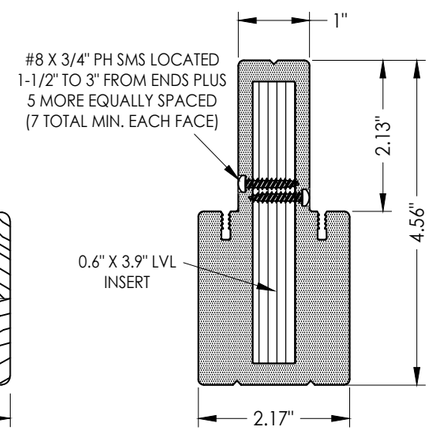

5 **INTEGRAL MULLION**
PVC/LVL

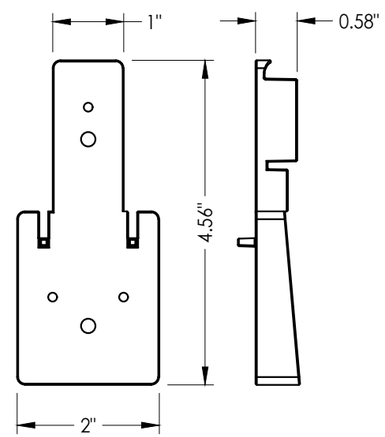

6 **INTEGRAL MULLION BASE KIT**
Optional

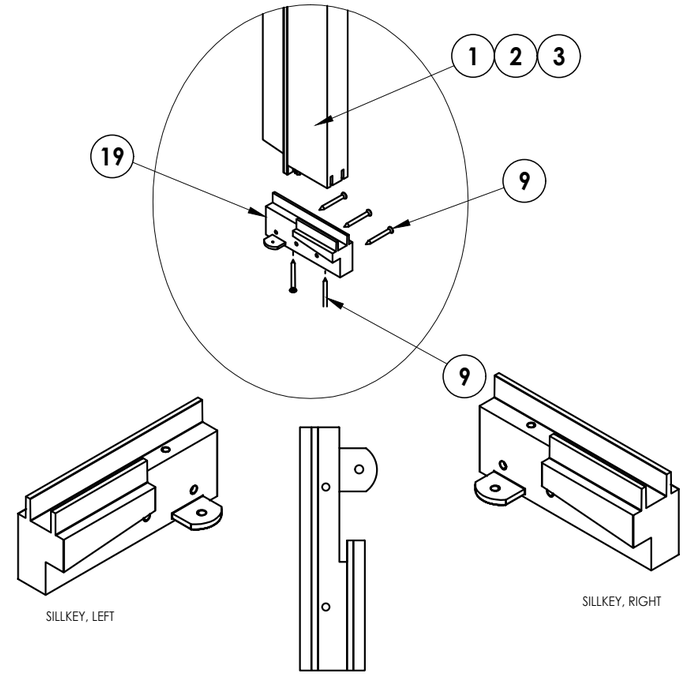

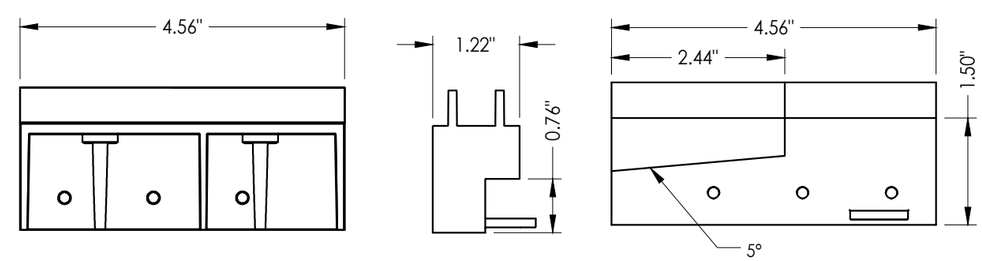

19 **SILLKEY DETAILS**
Optional

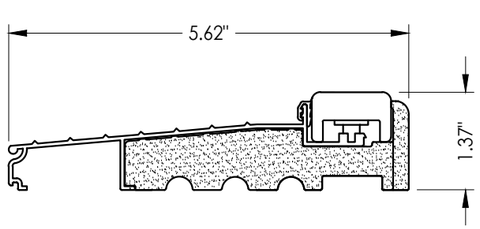

31 **INSWING THRESHOLD**

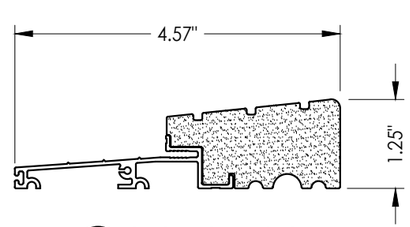

33 **OUTSWING THRESHOLD**
High-dam

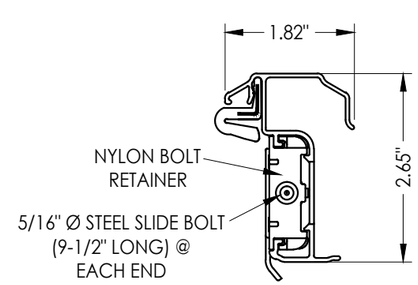

53 **ULTIMATE HURRICANE ASTRAGAL**
Endura Products

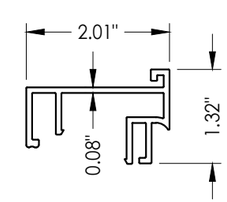

32 **SIDELITE SPACER**
Inswing

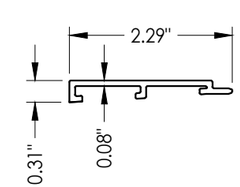

34 **SIDELITE SPACER**
Outswing

Documents Prepared By:
Lyndon F. Schmidt
P.E. No. 43409

RW BUILDING CONSULTANTS, INC.
P.O. Box 230, Valrico, FL 33595
Phone No.: 813.659.9197
FBPE Registry No. 9813

PRODUCT: *TRINITY GLASS INT'L*

PART OR ASSEMBLY: *COMPONENTS*

REVISIONS

NO.	DATE		BY
1	8/01/23	UPDATE TO 8TH ED. (2023) FBC	LFS

DATE: 4/15/21
SCALE: N.T.S.
DWG. BY: RW
CHK. BY: LFS
DRAWING NO.: FL-25575.18
SHEET 12 OF 13

© 2021 R.W. BUILDING CONSULTANTS INC.

Z:\2023 FBC Drawings\Trinity Glass Int'l\FL-25575 R5\FL-25575.17-18.dwg

BILL OF MATERIALS

ITEM #	DESCRIPTION	MATERIAL
A	1X BUCK (SG >= 0.42)	WOOD
B	2X BUCK (SG >= 0.42)	WOOD
C	1/4" MAX. SHIM SPACE	-
D	1/4" X 2-3/4" PFH DeWALT OR ITW CONCRETE SCREW	STEEL
E	MASONRY - 3,000 PSI MIN. CONCRETE CONFORMING TO ACI 301 OR HOLLOW BLOCK CONFORMING TO ASTM C90	CONCRETE
F	1/4" X 3-3/4" PFH ITW CONCRETE SCREW	STEEL
G	3/16" X 3-1/4" PFH ITW CONCRETE SCREW	STEEL
H	3/16" X 2-1/4" PFH ITW CONCRETE SCREW	STEEL
K	1/4" X 2-3/4" PFH DeWALT CONCRETE SCREW	STEEL
L	#10 X 2-1/2" PFH WS (1.15" MIN. EMBEDMENT)	STEEL
P	1/4" X 2-3/4" PFH DeWALT OR ITW CONCRETE SCREW	STEEL
1	HEAD & JAMB (FINGER JOINT PINE: SG >= 0.42)	WOOD
2	HEAD & JAMB	PVC
3	HEAD & JAMB (5.25") (FINGER JOINT PINE: SG >= 0.42)	WOOD
4	INTEGRAL MULLION (PINE: SG >= 0.42)	WOOD
5	INTEGRAL MULLION (PVC)	PVC
6	INTEGRAL MULLION BASE KIT	ABS
7	WEATHERSTRIP	FOAM
8	DOOR BOTTOM SWEEP	PVC
9	#6 X 1-1/4 PFH DRYWALL SCREW	STEEL
11	#9 X 2-1/4" PFH WOOD SCREW	STEEL
16	LATCH STRIKE PLATE	STEEL
17	DEADBOLT STRIKE PLATE	STEEL
19	SILLKEY	ABS
24	#9 X 3/4" PFH WS	STEEL
25	#9 X 1" PFH WS	STEEL
26	#10 X 2" PFH WS	STEEL
27	#8 X 2-1/2" PFH WOOD SCREW	STEEL
28	#10 X 3" PFH WOOD SCREW	STEEL
29	4" X 4" HINGE	STEEL
31	INSWING THRESHOLD ALUMINUM w/ COMPOSITE SUBSTRATE	ALUM./ COMP.
32	SIDELITE SPACER - INSWING	PVC
33	OUTSWING HIGH - DAM THRESHOLD ALUMINUM w/ COMPOSITE SUBSTRATE	ALUM./ COMP.
34	SIDELITE SPACER - OUTSWING	PVC
40	DOOR PANEL	-
50	SIDELITE PANEL	-
53	ALUMINUM ASTRAGAL	ALUM
54	ASTRAGAL STRIKE PLATE	STEEL

CONCRETE ANCHOR NOTES:

1. *Concrete anchor locations at the corners may be adjusted to maintain the min. edge distance to mortar joints.*
2. *Concrete anchor locations noted as "MAX. ON CENTER" must be adjusted to maintain the min. edge distance to mortar joints, additional concrete anchors may be required to ensure the "MAX. ON CENTER" dimension are not exceeded.*
3. *Concrete anchor table:*

ANCHOR TYPE	ANCHOR SIZE	MIN. EMBEDMENT	MIN. CLEARANCE TO MASONRY EDGE	MIN. CLEARANCE TO ADJACENT ANCHOR
ITW BUILDEX TAPCON®	3/16"	1-1/4"	AS SHOWN	1-1/2"
	1/4"	1-1/4"	2"	4"
DeWALT ULTRACON®+	1/4"	1-1/4"	1"	4"

WOOD SCREW INSTALLATION NOTES:

1. *Maintain a minimum 5/8" edge distance, 1" end distance, & 1" o.c. spacing of wood screws to prevent the splitting of wood.*

Documents Prepared By:
Lyndon F. Schmidt
P.E. No. 43409
RW BUILDING CONSULTANTS, INC.
P.O. Box 230, Valrico, FL 33595
Phone No.: 813.659.9197
FBPE Registry No. 9813

PRODUCT: TRINITY GLASS INT'L

PART OR ASSEMBLY: BILL OF MATERIALS

REVISIONS

NO.	DATE		BY
1	8/01/23	UPDATE TO 8TH ED. (2023) FBC	LFS

DATE: 4/15/21
SCALE: N.T.S.
DWG. BY: RW
CHK. BY: LFS
DRAWING NO.: FL-25575.18
SHEET 13 OF 13

© 2021 R.W. BUILDING CONSULTANTS INC.

Z:\2023 FBC Drawings\Trinity Glass Int'l\FL-25575 R5\FL-25575.17-18.dwg